cycle-works

secure | cycle | parking

Mantis Maintenance Stand

Key Features of the Mantis Maintenance Stand

Technical Specification

Dimensions	H 150cm / W 45cm / D 65cm
Materials	Hot dipped galvanised and PPC
Colours	6 standard RAL's
Fixing	Base plate
Tools	Adjustable wrench 200mm
	Set of a Hexagon wrenches 1.5-8
	Crosstip screwdriver
	Flat screwdriver
	Open end wrench 13/14
	Open end wrench 15/17
	Metal tire lever 2pcs

Built to Last

New and improved Mantis Maintenance Stand for use in public places. Tools hidden inside the repair stand, more powerful floor pump with new protection cover.

Bicycle Floor pump with gauge

- Model: SKS Airworx 10.0
- Pressure: 10bar / 144psi
- Multi-Valve-Head with thumb lock lever for all valves

02392 815 555
sales@cycle-works.com
cycle-works.com
cycle-works limited
Registured in England 3268339

Secured by Design
Official Police Security Initiative

SOLD SECURE
TESTED TO REDUCE CRIME

veriforce CHAS
Accredited Contractor

Constructionline
a Once For All company

We are a Living Wage Employer

cycle-works

secure | cycle | parking

Mantis Maintenance Stand

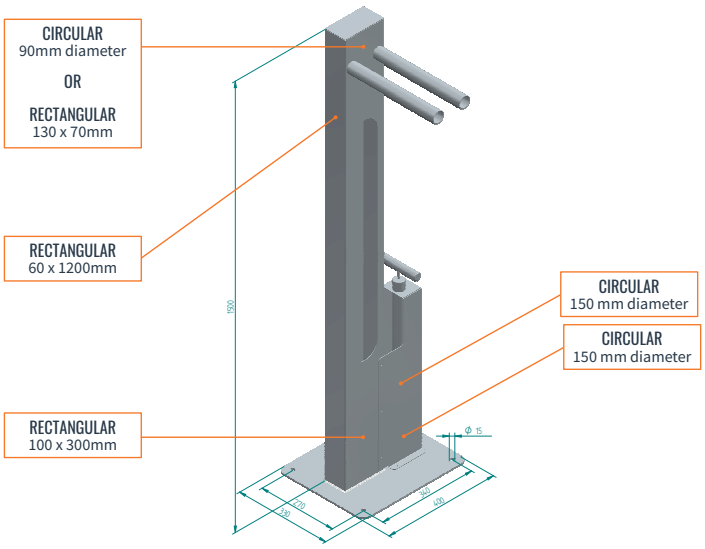

02392 815 555
sales@cycle-works.com
cycle-works.com
cycle-works limited
Registured in England 3268339

Secured by Design
Official Police Security Initiative

SOLD SECURE
TESTED TO REDUCE CRIME

veriforce CHAS
Accredited Contractor

Constructionline
a Once For All company

We are a Living Wage Employer